GLOBE

COMPACT PISTON AIR MOTORS

Your Global Force in Air Power

GLOBE AIR POWER

Compact Piston Air Motors

ATEX

Ex II-2-GDc-T5

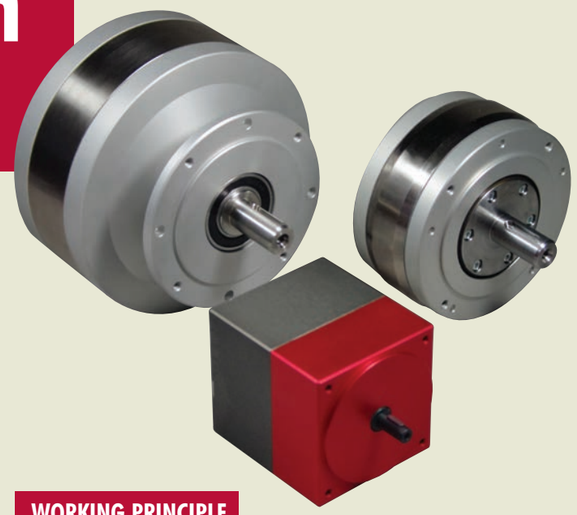

CONTENTS PAGE

Photos on the front cover on courtesy of:
BPL, Haelen (NL) – Manipulator
Duits Engineering, Zutphen (NL) – Turning device
Gritco Equipment BV, Ridderkerk (NL) – Sand blasting equipment
Aerofilm Systems BV, Eindhoven (NL) – Lifting table
EMCE, Voorhout (NL) – Winch
Hydrauvision, Schoondijke (NL) – Powerpack

WORKING PRINCIPLE

The compact radial piston air motor operates without rod or crank shaft. The radial arranged pistons travel along a curve and are controlled by the centre.

The static control shaft supplies the driving pistons with the necessary air. Air supply and release openings along the static shaft are periodically opened and closed by the rotation of the rotor to pressurise or release the pistons in an appropriate sequence.

Six of the twelve driving pistons are actively contributing to the torque at any moment. Once reaching the highest point on the curve, the air driving the piston is released by the control unit and the piston is forced into its lowermost position. This operating principle is equivalent with the one of a simple cylinder.

The compact piston air motor's high torque is due to the power transmission of the pistons along the large external diameter of the curve. The friction connected with the travel along the curve is low due to the installation of rollers at the tip of the pistons. This results in high lifetime of the drive.

Noise emissions were determined according to the noise measuring standards ISO 11202 and within the frame of the ISO 11200 standards. The measured noise levels were below 78 dB for the RM012 and RM024. The pneumatic drive thus fulfils the noise regulations without requirement for ear protection devices.

We recommend to operate the drive within a speed range of 50 – 350 R.P.M. shaft dimensions can be adapted according to the specific requirements of the client. Dimensions in millimetres.

ADVANTAGES

Air motors offer a unique form of drive and incorporate advantages not found in other prime movers.

- Simple and inexpensive variable speed and torque control with a flow control valve and/or pressure regulator.
- Intrinsically safe for explosion proof environments. The compact piston air motors are certified according to the European explosion directive ATEX II cat. 2 G&D T5.
- Air motors can be stalled indefinitely under load. They will not overheat or burn out.
- Long lifetime because of low friction and a minimum of parts that are exposed to wear.
- Controllable over a wide speed range.
- Instantly reversible, operated with a simple control valve.
- Resistant to warm, dirty and damp conditions.
- No shock start up which improves the life span of the equipment.
- 12 pistons for very low speeds and smooth running.
- Improved design pistons for longer life time.
- Oil free running.
- Silicone free so very useful in mixing applications.
- Available with front flange, which incorporates an extra bearing.
- Small dimensions.
- Special version for food and chemical industry.
- ATEX approved.

WHY CHOOSE A COMPACT PISTON AIR MOTOR?

Within the air motor family the compact piston air motor takes a special place, because this motor is often used in applications where other air motors can not be used.

- High torque at low speed of rotation. Therefore most of the times a gearbox is not necessary.
- Highest torque at start-up. The compact piston air motor does not have a variable starting torque. This always guarantees the rated starting torque.
- Possibility to connect up to three units in series if higher torque or power is required.
- Very low air consumption due the use of pistons, low internal friction and low internal air leakage.
- Low noise emission that fulfils the noise regulations without requiring ear protection.
- The compact piston air motors can be supplied directly coupled to a wide range of gearboxes such as planetary, helical bevel helical and worm gears.
- Due to the low speed of rotation the compact piston air motor is especially suitable for applications in which the air motor is constantly in stall.
- Compact construction made out of aluminium with steel shaft. Also available in a plastic housing with a stainless steel shaft.
- Integrated brake function. When both the inlet and outlet port are pressurised, the motor functions as a brake with a torque that is 50% of the starting torque.
- Able to run without lubrication. The compact piston air motors can operate with a minimum of lubrication. Complete oil-less operation is possible in certain applications. Consult GLOBE Airmotors BV or your local distributor for more information.

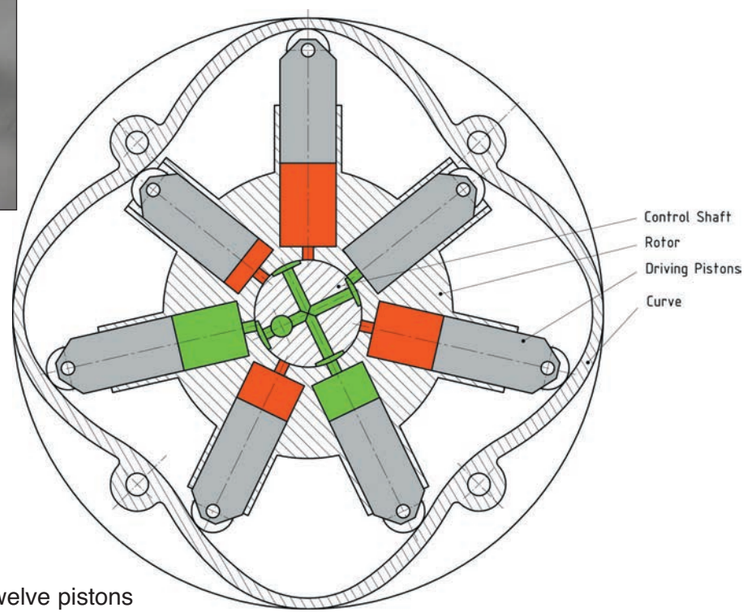

Both RM012 and RM024 have twelve pistons

APPLICATIONS

Compact piston air motors are used in numerous of applications. Most suitable are light and medium duties at low speed operations. A combination of a GLOBE compact piston air motor with a large variety of gearboxes is possible when lower speed operations and/or higher torques are demanded for the application.

The most typical applications for compact piston air motors are:

- Mixing equipment
- Winding equipment
- Conveyor belts
- Hose Reels
- Turntables
- Packing machines
- Cap screwing machines

CONTROLLING AIR MOTORS

Speed regulation

Controlling the performance of an air motor is done by regulating the air supply. This is relatively cheap and simple. The methods to regulate the air supply are throttling and pressure regulation.

Throttling

The air flow is controlled by placing a flow control valve at the inlet port or the outlet port of the air motor. Throttling will reduce the maximum speed of the motor but will not affect the starting performance; the air pressure is unaffected at low flow conditions i.e. starting. Note the difference in the graph between throttling on the inlet port and outlet port.

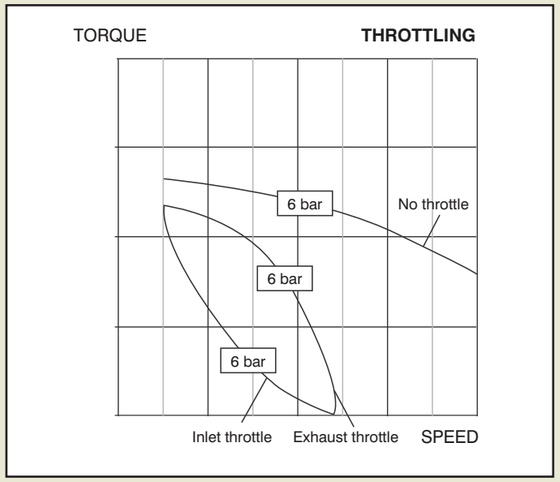

THROTTLING METHODS

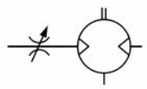

Inlet throttling, uni-directional motor.

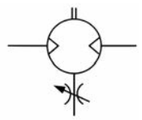

Outlet throttling, uni-directional motor.

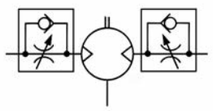

Inlet throttling, bi-directional motor.

Pressure regulating

The speed and power can also be reduced by installing a pressure regulator on the incoming air supply. The pressure regulator reduces the air pressure to the motor. A pressure regulator is always fitted on the inlet port. By using a pressure regulator the torque on the output shaft will be affected, starting torque is best controlled with this method.

PRESSURE REGULATING METHOD

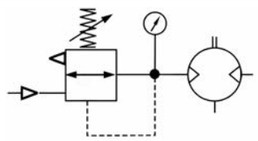

Pressure regulation, uni-directional motor.

When both the speed and the torque are to be controlled the best configuration is to use a pressure regulator in the air line to the motor and a flow control valve on the outlet port. This way every point in the torque-speed graph can be set accurately.

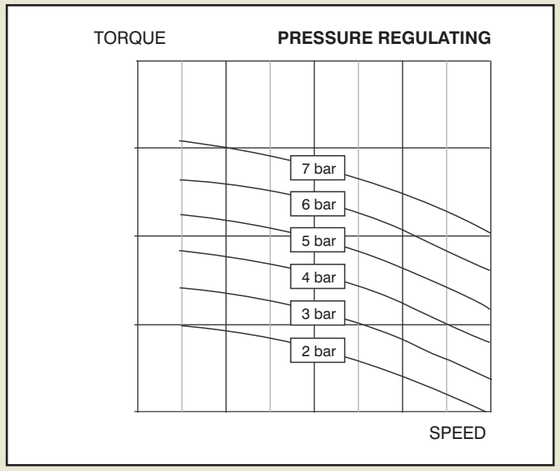

Directions of rotation

The GLOBE piston air motors can be used both as a uni-directional and as a bi-directional air motor. When the air motor is used in a non-reversible application, it is sufficient to use a 2/2 or a 3/2 valve. For the reversible motor you can use either a 5/3 or two 3/2 valve to gain directional control.

UNI - DIRECTIONAL

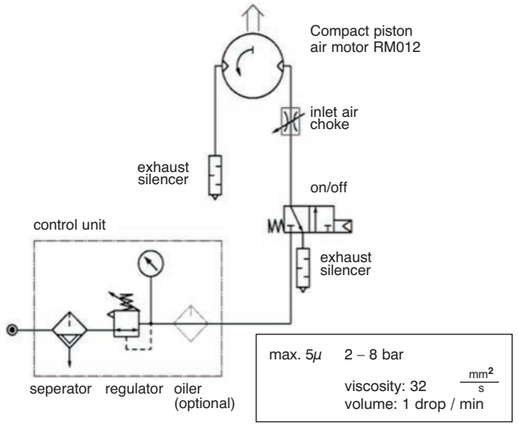

BI - DIRECTIONAL

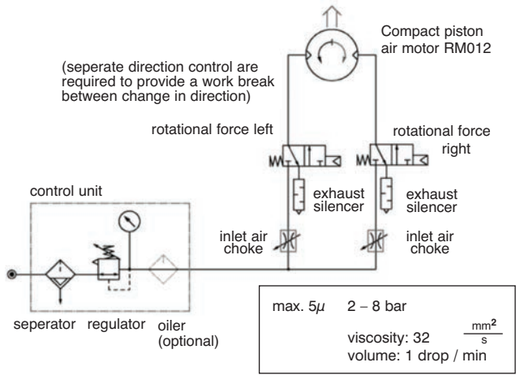

AIR SUPPLY

Air quality

To insure optimal working conditions for the GLOBE piston air motors, the air supply must be dry, filtered and lubricated. A 5 micron filter or better is recommended. The GLOBE piston air motors should be lubricated sufficiently. Oilless operations are possible in certain applications.

Air line restrictions

Air line restrictions on the inlet side of the motor will result in performance loss. Therefore it is important to make sure that the desired air pressure is available at the motor during operation.
The pressure reading at the compressor or pressure regulator may be different then the pressure available at the motor. Performance loss can also occur by an exhaust restriction generating back pressure on the outlet side of the motor. An insufficiently sized silencer, valve or coupling is usually the cause.

GEARED VANE AIR MOTORS

Although air motors can be adjusted over a wide range of speed and torque, the output characteristics are not always suitable for the application. To achieve the required output speed and torque a gearbox can be coupled directly to the air motor.

GLOBE Airmotors BV has a wide range of gear units such as planetary, helical, beval helical and worm gears in their program. Consult Globe Airmotors BV or your local distributor for more detailed information.

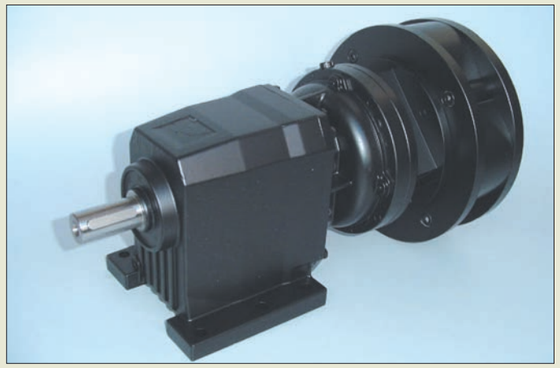

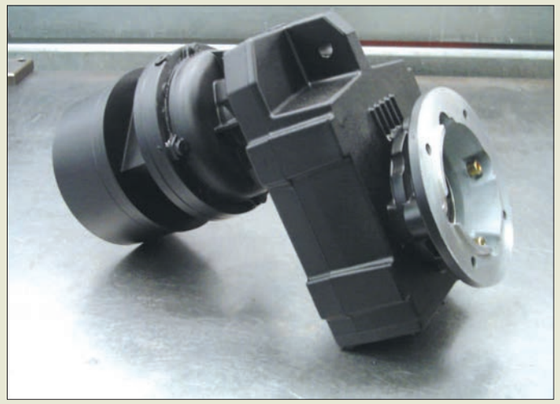

DIMENSIONS RM004 CW, CCW

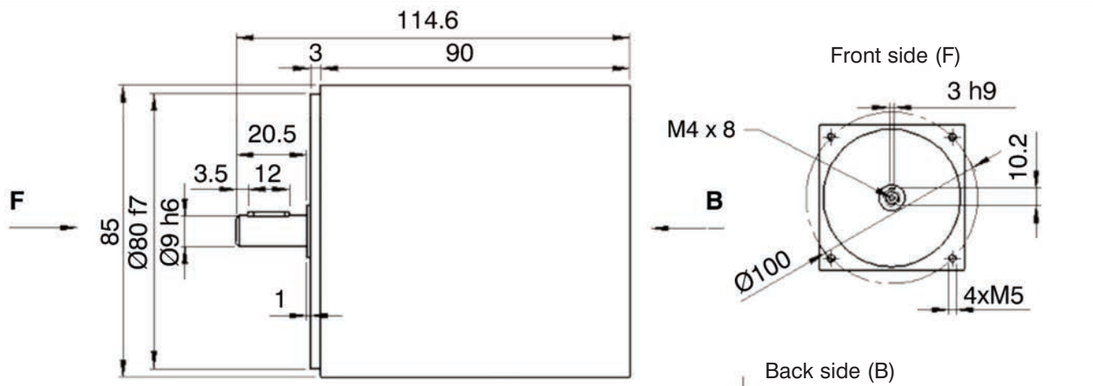

	Type	Rational Speed	Torque	Weight	IP
	RM004 CW (Clockwise)	60 - 600rpm	0.5 - 3 Nm	2.1 kg	64
	RM004 CCW (Counter clockwise)	60 - 600rpm	0.5 - 3 Nm	2.1 kg	64

CW = Clockwise
CCW = Counter-Clockwise
When looked upon shaft

DIMENSIONS RM004 - R Reversible

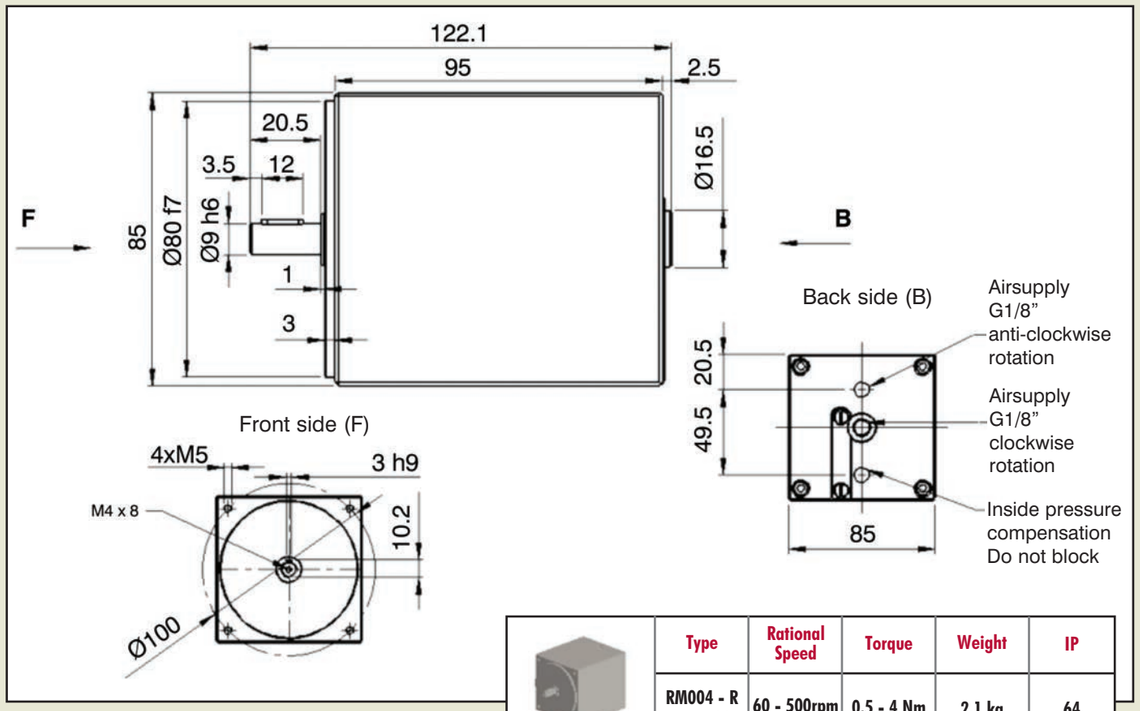

	Type	Rational Speed	Torque	Weight	IP
	RM004 - R Reversible	60 - 500rpm	0.5 - 4 Nm	2.1 kg	64

PERFORMANCE RM004

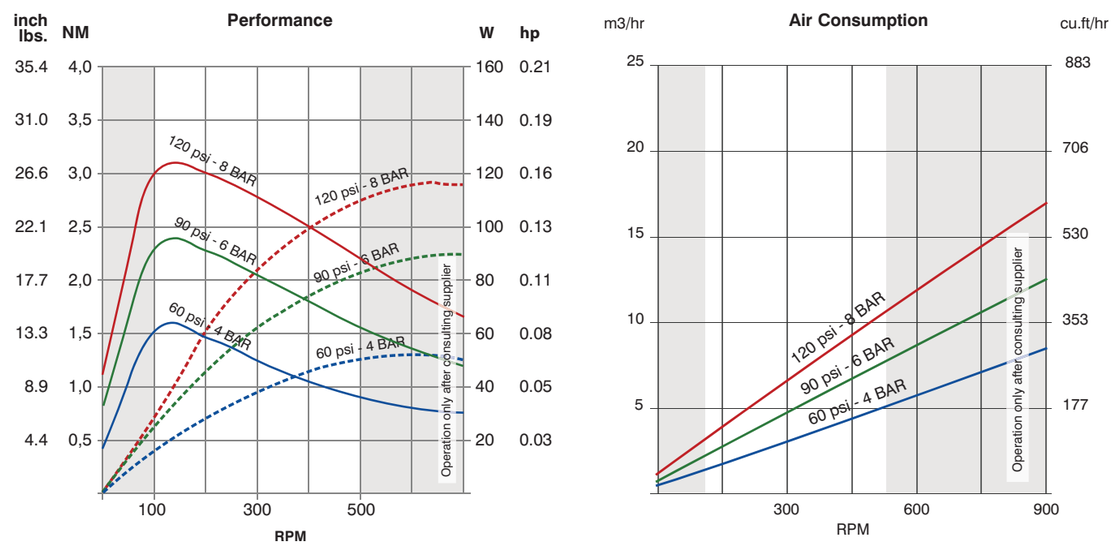

RM012 AND RM024 ORDERING CODES

RM012-PFX

RM024-IFX

type of motor

RM012	ø135 x 6	12 Nm
RM024	ø175 x 80	24 Nm

RM012 / RM024 – S X X

ATEX Certificate

X	no ATEX
A	ATEX II cat.2 G&D T5

material of housing

S	nickel-plated steel	IP 50
I	Inox (RM024 only)	IP 64
P	plastic (RM012 only, non atex)	IP 64

flange option

X	no flange	max. 150 N
F	flange	max. 2’000 N

POSSIBLE TYPES

RM012/RM024-SXX	steel housing
RM012/RM024-SFX	steel housing and flange
RM012/RM024-SXA	steel housing ATEX
RM012/RM024-SFA	steel housing, flange, ATEX
RM012-PXX	Plastic housing, water resistant,stainless shaft and covers
RM012-PFX	Plastic housing, flange with extra bearing, water resistant, stainless shaft and covers
RM024-IXX	Inox housing, water resistant, stainless shaft and covers
RM024-IFX	Inox housing, flange, water resistant, stainless shaft and covers

DIMENSIONS RM012 - SXX, PXX, SXA ATEX

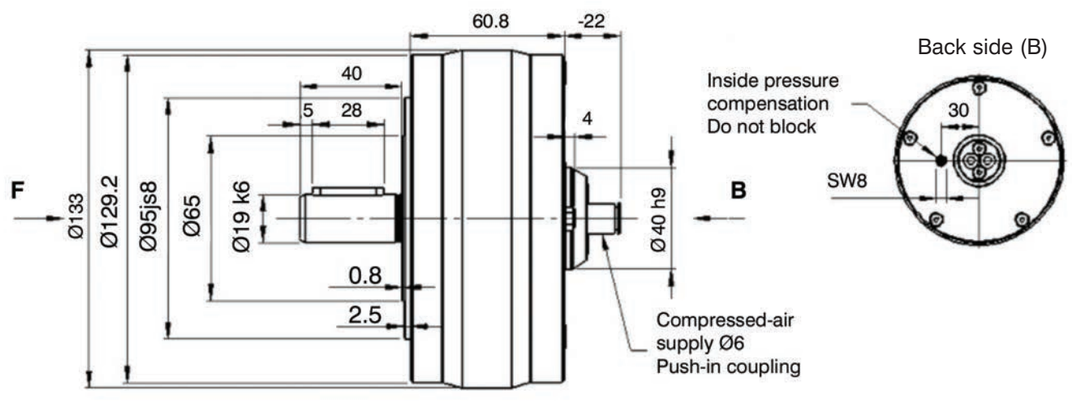

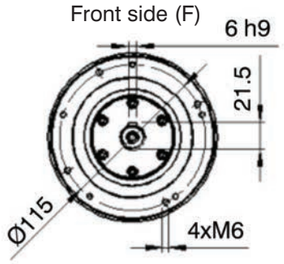

Type	Rational Speed	Torque	Weight	IP
RM012 - SXX	50 - 350 rpm	0.5 - 1.4 Nm	3.8 kg	50
RM012 - PXX	50 - 350 rpm	1 - 14 Nm	4.2 kg	50
RM012 - SXA ATEX	50 - 350 rpm	1 - 14 Nm	4.2 kg	64

DIMENSIONS RM012 - SFX, PFX, SFA ATEX

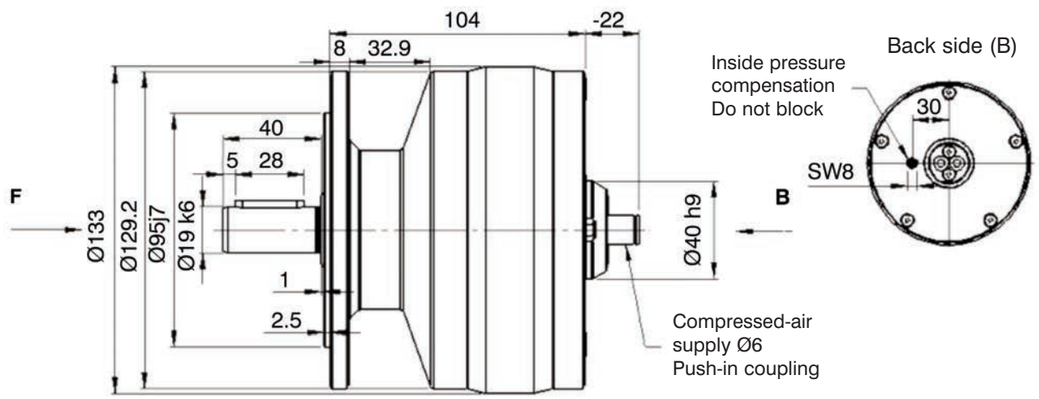

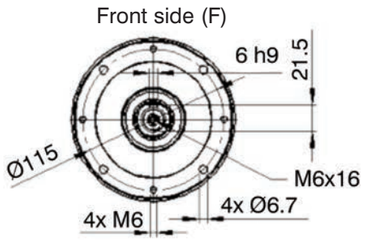

Type	Rational Speed	Torque	Weight	IP
RM012 - SFX	50 - 350 rpm	0.5 - 1.4 Nm	4.6 kg	50
RM012 - PFX	50 - 350 rpm	1 - 14 Nm	5.8 kg	64
RM012 - SFA ATEX	50 - 350 rpm	1 - 14 Nm	5.8 kg	64

PERFORMANCE RM012

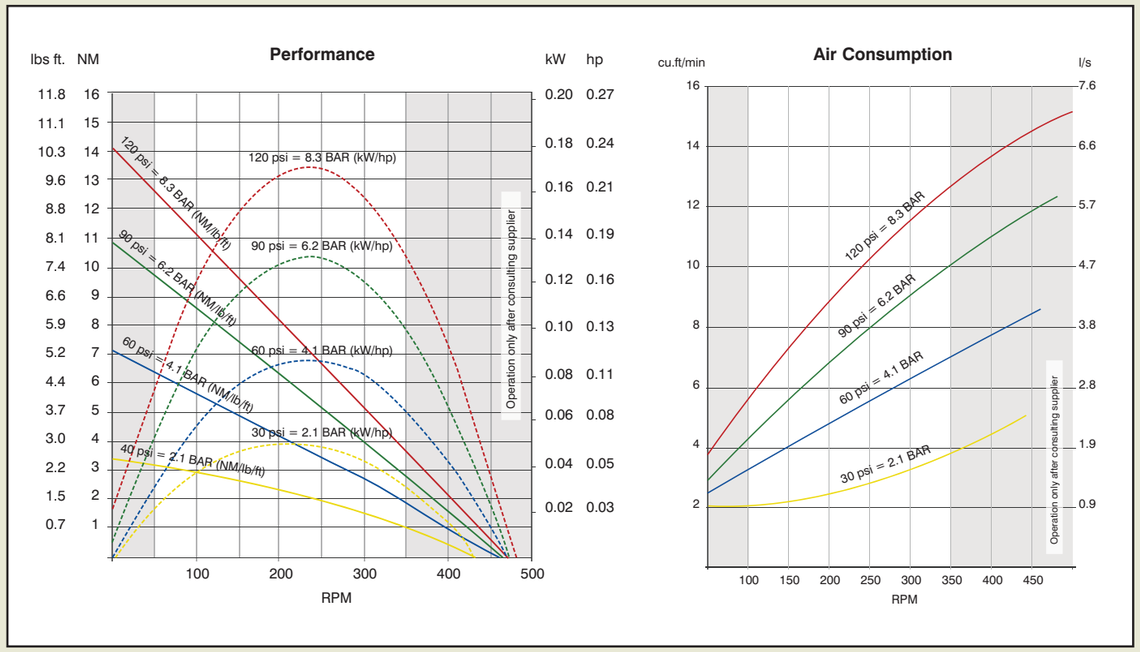

LOAD DIAGRAM FOR RM012 SFA, SFX, PFX

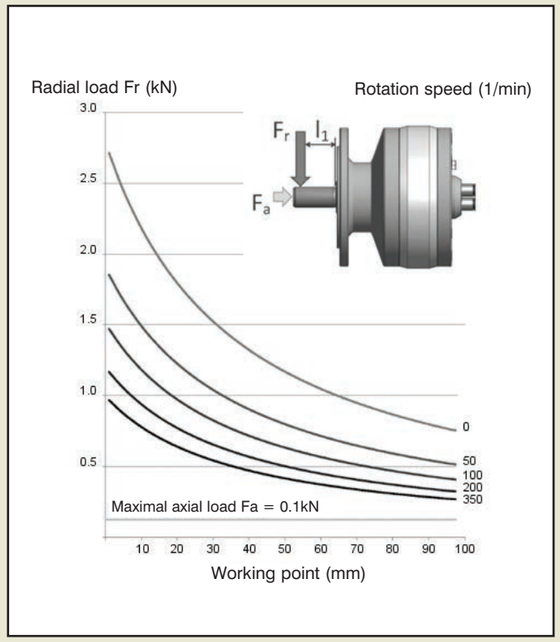

LOAD DIAGRAM FOR RM012 SXX, SXA, PXX

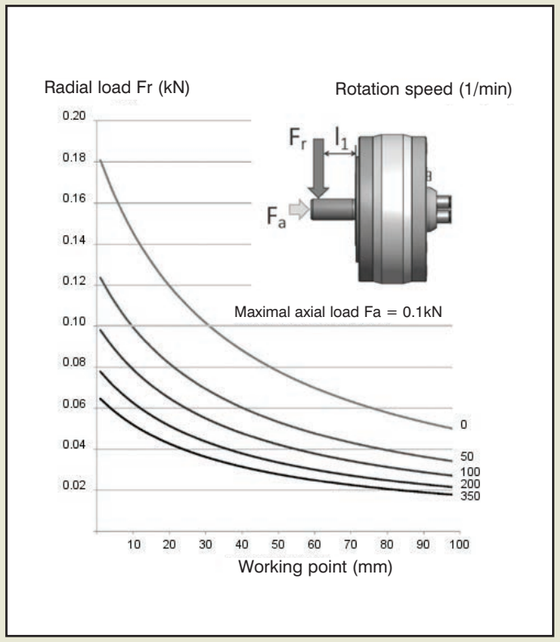

DIMENSIONS RM024 - SXX, IXX, SXA ATEX

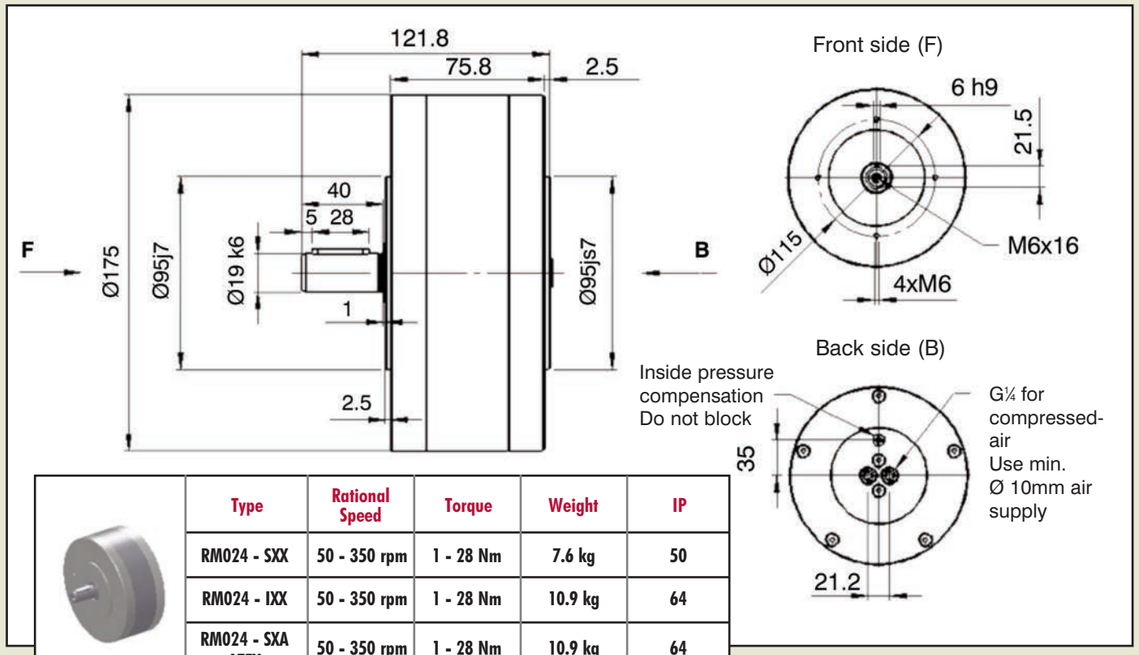

Type	Rational Speed	Torque	Weight	IP
RM024 - SXX	50 - 350 rpm	1 - 28 Nm	7.6 kg	50
RM024 - IXX	50 - 350 rpm	1 - 28 Nm	10.9 kg	64
RM024 - SXA ATEX	50 - 350 rpm	1 - 28 Nm	10.9 kg	64

DIMENSIONS RM024 - SFX, IFX, SFA ATEX

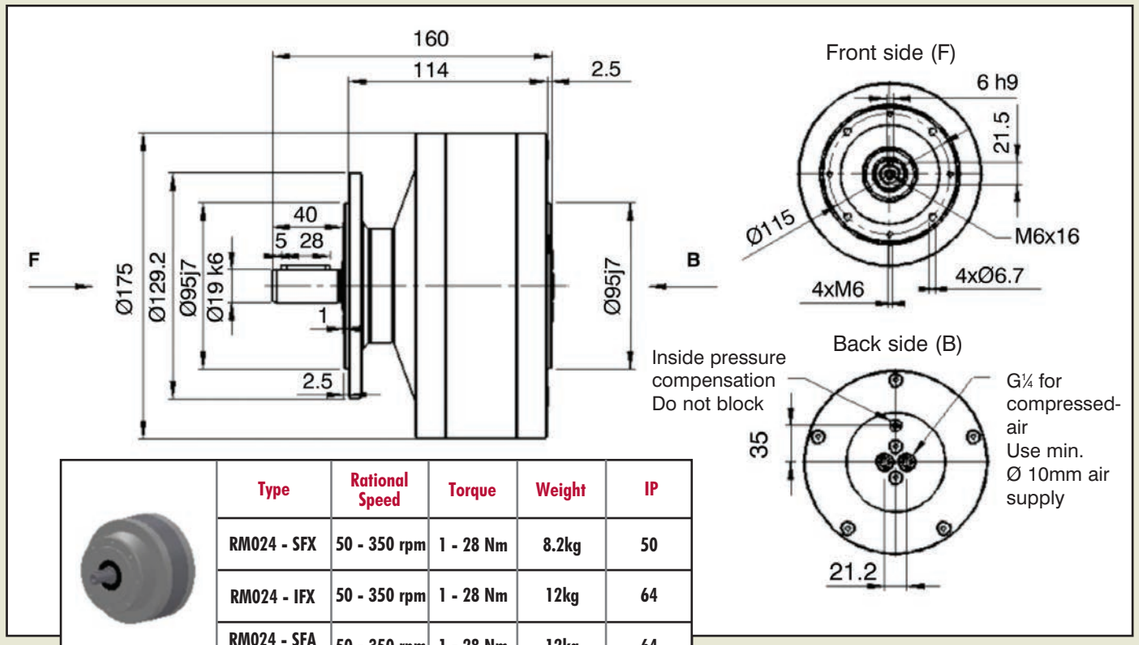

Type	Rational Speed	Torque	Weight	IP
RM024 - SFX	50 - 350 rpm	1 - 28 Nm	8.2kg	50
RM024 - IFX	50 - 350 rpm	1 - 28 Nm	12kg	64
RM024 - SFA ATEX	50 - 350 rpm	1 - 28 Nm	12kg	64

PERFORMANCE RM024

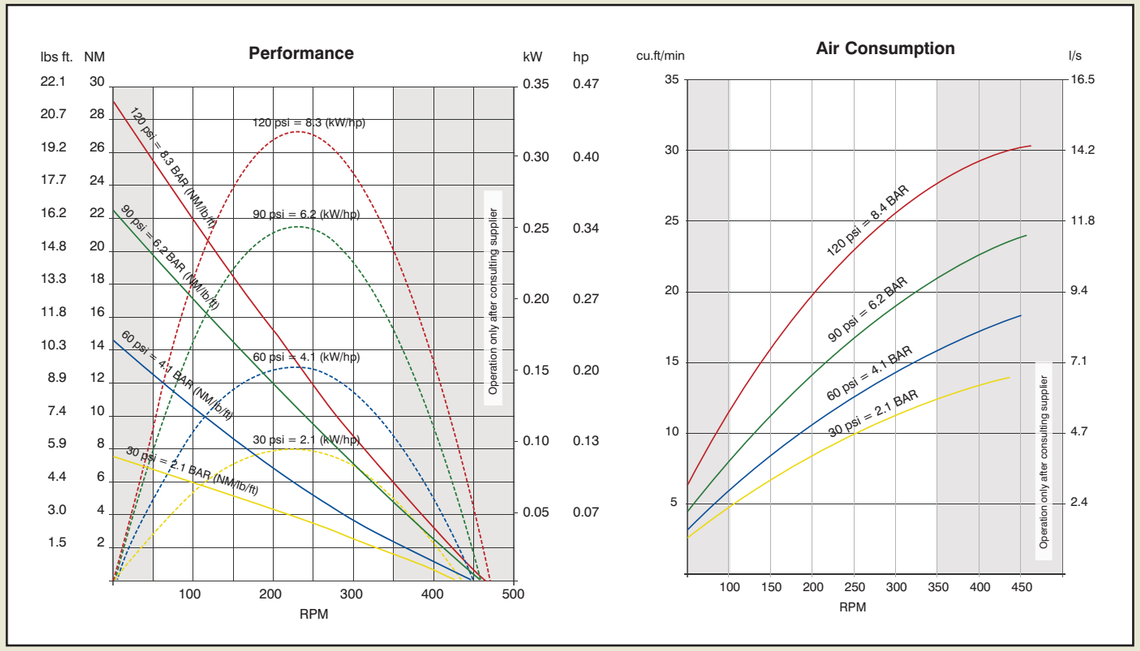

LOAD DIAGRAM FOR RM024 SFA, SFA, IFX

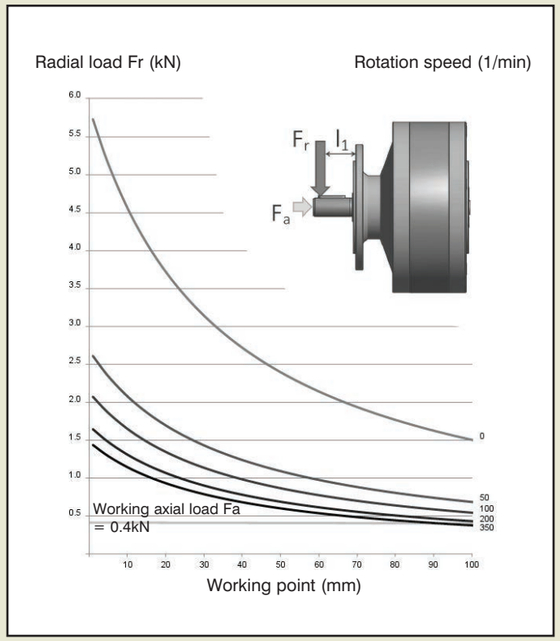

LOAD DIAGRAM FOR RM024 SXX, IXX, SXA

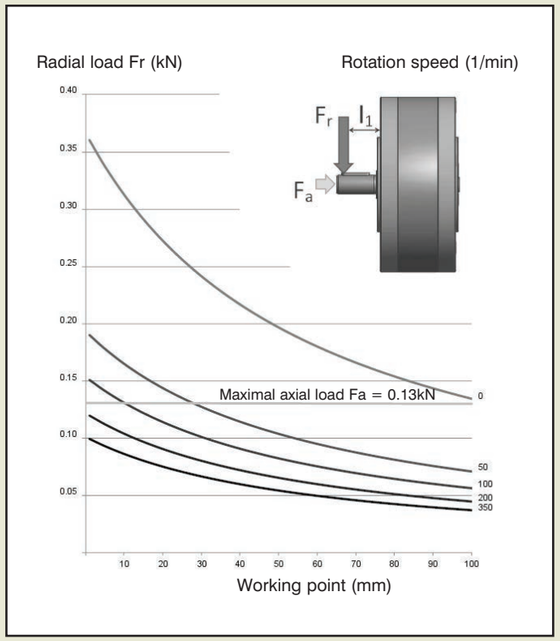

Globe Airmotors Program

Vane Air Motor
Reversible, available in flange, foot, or face execution.
Power from 0,44 to 9,5 kW.

Compact Air Motor
Reversible, compact, available with a wide range of incorporated reduction units. Power from 180 to 1000 W.

Planetary Geared Vane Air Motor
Reversible and a compact solution. Available with gear ratios from 3:1 to 1000:1. Power from 0,44 to 5,4 kW.

Vane Air Motor with Gearbox
Available with planetary, coaxial, or worm gearboxes. Also possible with pneumatic brake.

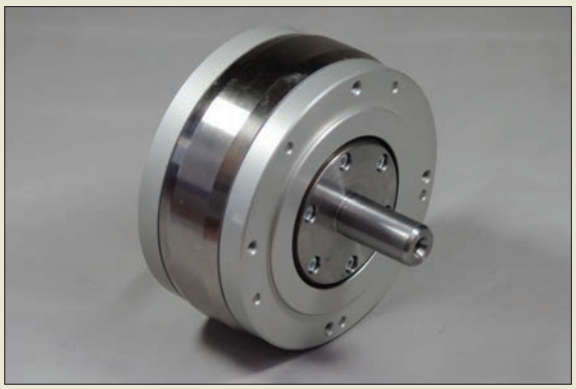

Compact Piston Air Motor
High torque at low speed of rotation, very low air consumption and low noise level.
Power from 110 to 460 W.

Radial Piston Air Motor
Available with proportional hand or remotely controlled valve, pneumatic brake and all types of gearboxes.
Power from 0,8 to 23 kW.

DISTRIBUTOR

GLOBE AIRMOTORS B.V.
Eikenlaan 261E
NL 2404 BP Alphen aan den Rijn
Tel: (+31)-(0)172-426608
Fax: (+31)-(0)172-426607
E-mail: info@globe-benelux.nl
Web: http://www.globe-benelux.nl